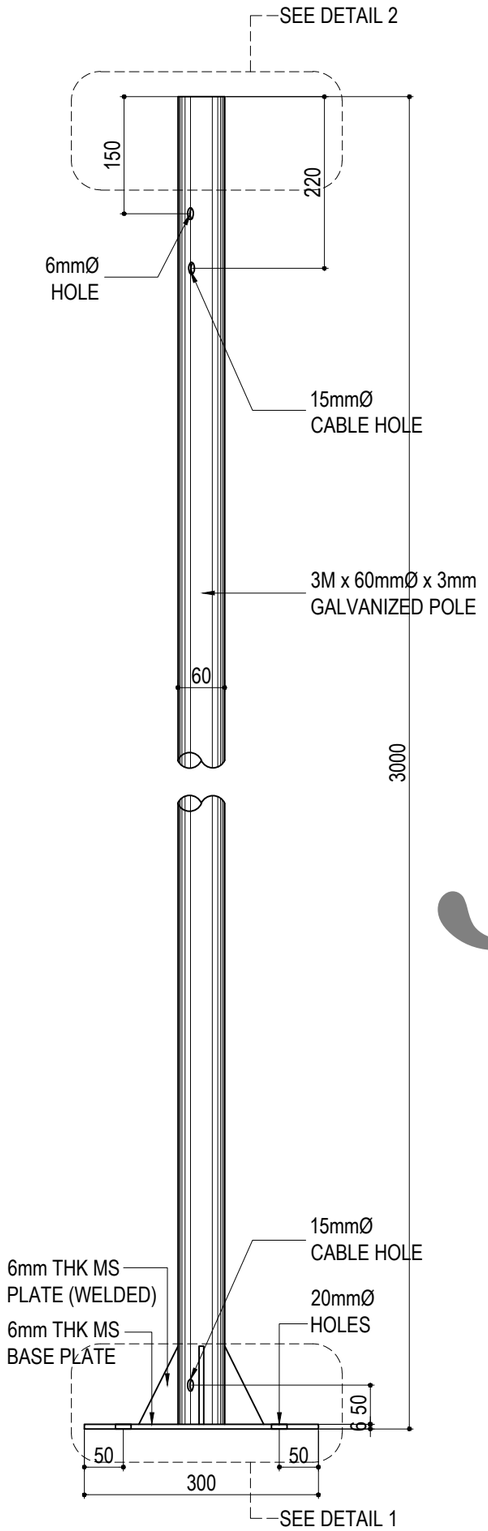

STEEL POST STRUCTURE

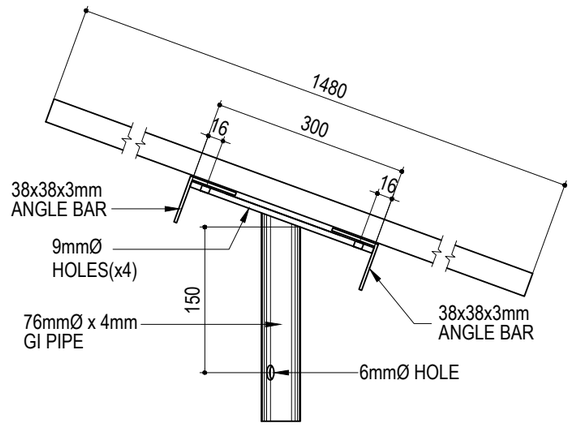

DET. 2-(SIDE VIEW)

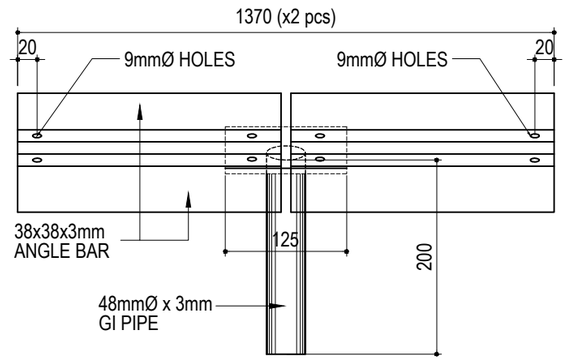

DET. 2-(FRONT VIEW)

SM Solar

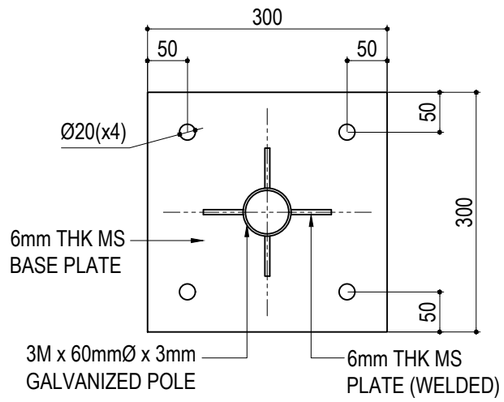

DETAIL-1 (POLE FLANGE)

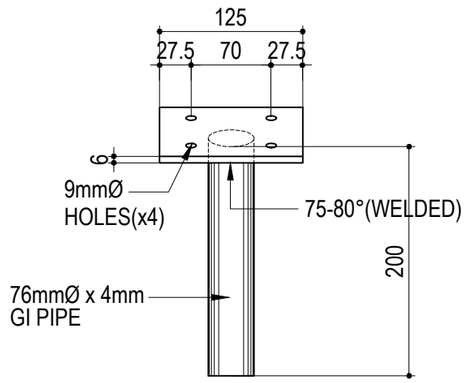

DET.2-(FRONT VIEW)

SM SOLAR PTE LTD

REV	DATE	AMENDMENTS	DRAWN	CHECKED

DRAWING TITLE:

SOLAR PANEL 60mm X 3M
(HOT GALV. FLANGED)

SCALE: As Indicated	DRAWN:	
DATE: 13 SEPT. 2018	CHECKED:	
DWG NO:	REV: 0	SHEET NO. 1